SIEMENS

Distributed By
BOONYIUM® Since 1958
บริษัท บุญเยี่ยมและสหาย จำกัด
BOONYIUM AND ASSOCIATES LIMITED

7712

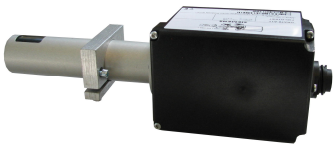
QRA7 with clamp

QRA10

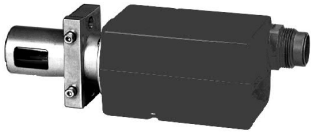
QRA53, QRA55 with clamp Bride

QRA2 with clamp

Flame Detectors

QRA2...
QRA10...
QRA53...
QRA55...
QRA73…
QRA75…

The UV flame detectors are designed for use with Siemens burner controls, for the supervision of gas or oil flames.

The QRA and this Data Sheet are intended for use by OEMs which integrate the flame detectors in their products.

Use

The flame detectors are used for the supervision of gas flames, yellow- or blue-burning oil flames and for ignition spark proving.

Flame detector	For use with burner control type	Operating mode
QRA2, QRA10	LGB2 / LGB4 with AGQ1 LFL LFE1 LFE10 LMG with AGQ2 LME21 / LME22 / LME39 with AGQ3 / LME7 LMV2 / LMV3 LMV5 with AGQ1	Intermittent
QRA53, QRA55	LGK16 LGI16	Continuous operation
QRA73, QRA75	LMV5 LME75	Continuous operation

Warning notes

To avoid injury to persons, damage to property or the environment, the following warning notes must be observed!

- All activities (mounting, installation and service work, etc.) must be performed by qualified staff
- Before carrying out any work on the flame detector, isolate the power supply completely (all-polar disconnection). Check the power supply with a suitable voltage test and secure the power supply against being switched on again unintentionally.
  If not observed, there is a risk of electric shock hazard.
- Ensure protection against electric shock hazard by providing adequate protection for the terminals. If this is not observed, there is a risk of electric shock
- Each time work has been carried out (mounting, installation, service work, etc.), check to ensure that wiring is in an orderly state. If this is not observed, there is a risk of electric shock
- Halogen lamps, welding equipment, special lamps or ignition sparks may produce sufficient radiation for the detector's UV cell to ignite. X-rays and gamma radiation can also generate erroneous flame signals. If this is not observed, there is a risk of loss of safety functions
- Fall or shock can adversely affect the safety functions. Such units must not be put into operation, even if they do not exhibit any damage. If this is not observed, there is a risk of loss of safety functions and a risk of electric shock

Mounting notes

- Ensure that the relevant national safety regulations are complied with
- Tightening torque for QRA2 housing screws: Max. 0.3 Nm

Installation notes

Always run the detector cable separate from other cables, especially from high-voltage ignition cables, while observing the greatest possible distance.

Electrical connection of the flame detector

It is important to achieve practically disturbance- and loss-free signal transmission:

- Never run the detector cable together with other cables
  – Line capacitance reduces the magnitude of the flame signal
  – Use a separate cable
- Observe the permissible lengths of the detector cable (refer to «Technical data» in the Data Sheet for the relevant burner control)

Trouble-free burner operation is ensured only when the intensity of UV radiation at the detector's location is high enough for the detector's UV cell to ignite during each half wave. The **intensity of UV radiation** at the detector's location **is checked** through **measurement of the detector current**

Measuring circuit for QRA2, QRA10, QRA5 series D and QRA5 series G

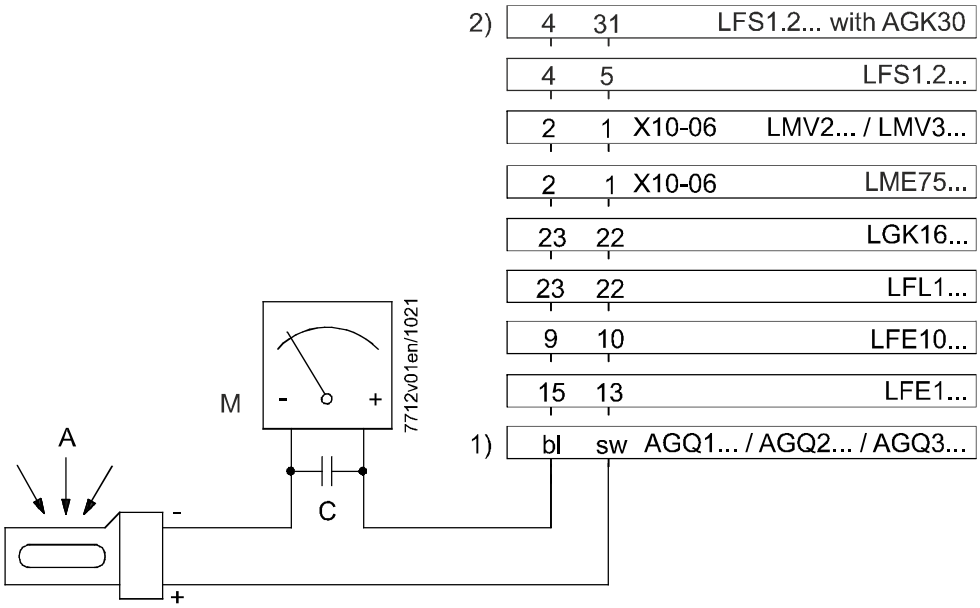

Legend

1) Connection of micro-ammeter across AGQ1 / AGQ2 / AGQ3 adapter and flame detector
2) Only in combination with QRA2M and QRA10M
A Viewing angle
M Micro-ammeter (DC), internal resistance ≤ 5000 Ω
C Electrolytic capacitor 100...470 µF, DC 10...25 V

Measuring circuit for QRA5 up to the C-series and QRA5 series E

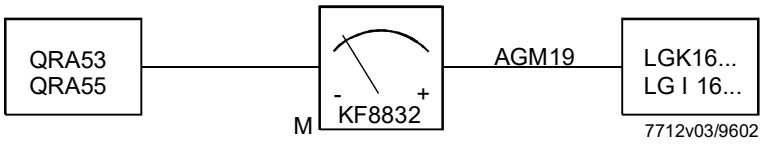

☞ Note!
The KF8832 flame detector current measuring device must not be used in continuous operation!

Minimum detector current values required:
Refer to the Data Sheet for the relevant burner control.

Commissioning notes (cont'd)

Measuring circuit for QRA7

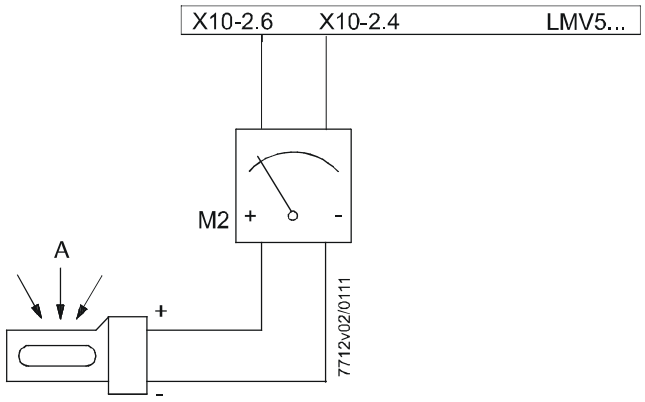

Legend

M2 Voltmeter direct current voltage
Measurement range 0...10 V
Internal resistance Ri ≥10 MΩ

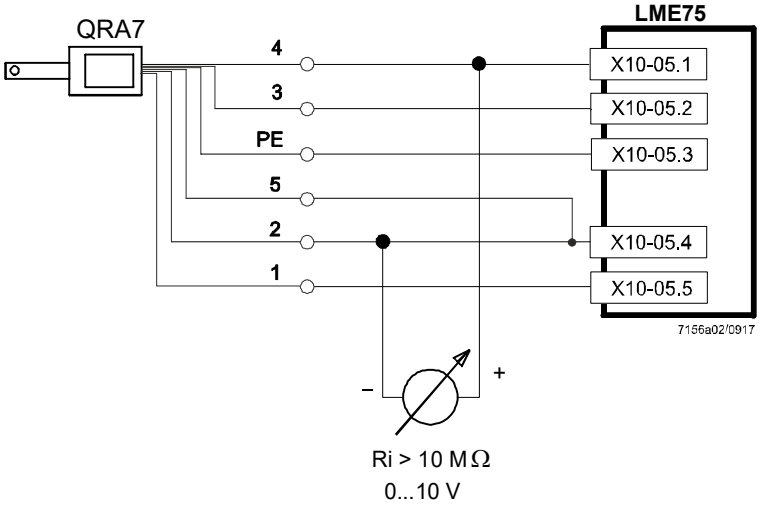

LME75 connection assignment:

X10-05 pin 1	QRA7 flame signal
X10-05 pin 2	QRA7 detector test
X10-05 pin 3	PE
X10-05 pin 4	N
X10-05 pin 5	L

Certificates

Note!
Only in connection with burner controls!

EAC Conformity mark (Eurasian Conformity mark)

ISO 9001:2015
ISO 14001:2015
OHSAS 18001:2007

China RoHS
Hazardous substances table:
http://www.siemens.com/download?A6V10883536

Service notes

Use the KF8832 service unit for short periods of time only.

Disposal notes

The flame detector contains electrical and electronic components and must not be disposed of together with domestic waste. Local and currently valid legislation must be observed.

Mechanical design

Flame detectors QRA2	Plastic housing metalized to prevent static charging caused by the air flow from the fan. For mounting direct on the burner. The detectors can be supplied with or without securing flange (version 4 241 8855 0/4 241 8898 0) and clamp (refer to «Type summary»).
Flame detectors QRA10	Die-cast aluminum housing with a mounting coupling D and connection facility for cooling air. The housing of this detector has a bayonet fitting which allows it to be secured either directly to the mounting coupling D or to the AGG06 glass holder. The mounting coupling D can be screwed to a viewing tube or to the AGG07 ball head. The Pg cable gland can be removed and replaced, if some other detector cable shall be used.
Flame detectors QRA5, QRA7	The detector's UV cell is located behind a swiveling shutter at the front end of the detector tube which is flanged to the housing. A quartz-glass window protects the tube and the shutter against dirt. The detector's housing accommodates a stepper motor to drive the shutter and the electronics to control the shutter. QRA5 series E and G differ with regard to the closing interval of the orifice. Using the AGG16.C adapter, this flame detectors can be mounted either directly on the burner, on a viewing tube or on a combustion chamber viewing hole.
Connecting cable AGM19	For the electrical connection of the flame detector QRA53 and QRA55.
Connecting cable AGM23	For the electrical connection of the flame detector QRA7.
Connecting cable AGM23U	For the electrical connection of the flame detector QRA7, USA version.

Note!
Applications in the USA are only possible with AGM23U.

Mounting coupling D	Using the bayonet fitting, the mounting coupling D can be attached either to the AGG06, the AGG16.C or the QRA10 flame detector. The mounting coupling D is supplied with the QRA10 or AGG16.C.
Adapter AGG16.C	Adapter AGG16.C for QRA5 and QRA7 made from die-cast aluminum, including mounting coupling D, which is fixed to the housing with a bayonet fitting.

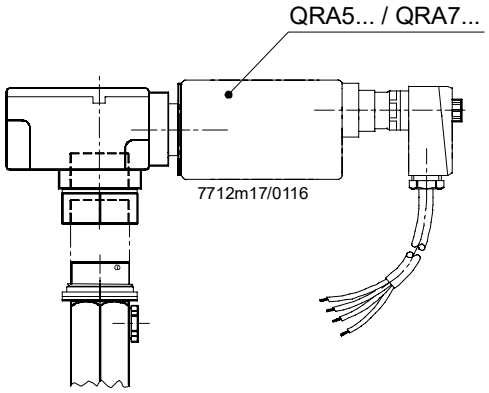

QRA5 / QRA7 with AGG16.C, including mounting coupling D

Quartz-glass lens AGG03

AGG03 with spring washer and O-ring for increasing the sensitivity.

Heat insulation glass AGG02

AGG02 with spring washer and O-ring. This heat insulation glass is required on applications where the temperature at the flame detector exceeds 80 °C. The AGG02 extends the life cycle of the UV cell.

Glass and quartz-glass lens holder AGG06

The glass and quartz-glass lens holder AGG06 serves for holding the AGG03 lens and the AGG02 heat insulation glass. The AGG06 also allows various combinations of lens, heat insulation glass and mounting coupling D. When using the lens and the heat insulation glass, the AGG06 with the lens must be mounted as close as possible to the flame detector.

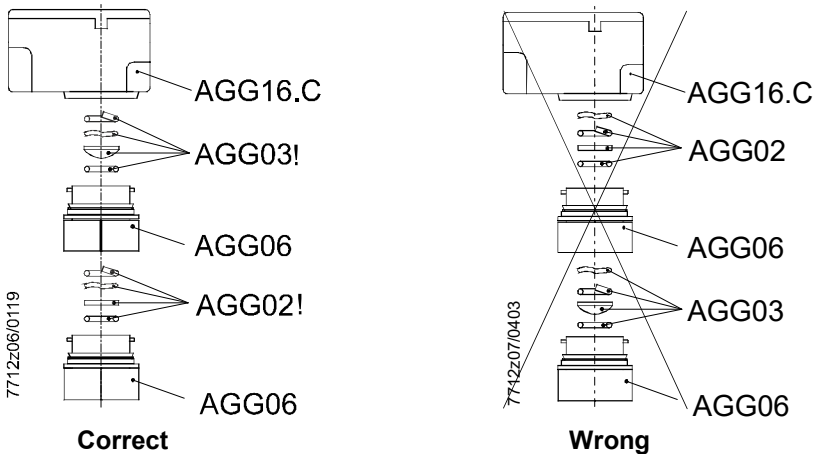

AGG06 has a bayonet fitting with which it is attached either to the housing of the AGG16.C or to the housing of the QRA10 and the 1 mounting coupling D. By undoing the bayonet fittings on both sides, the AGG06 glass holder(s) can be easily detached from the combination of QRA10 or AGG16.C and QRA53 or QRA55. This facilitates straightforward cleaning of the glass or lens without having to remove them from the AGG06 glass holder. The intermediate rings are used for the smooth running of the bayonet fittings, especially where – after removal of the flame detector – the hole to the combustion chamber serves as a viewing tube. By fitting the intermediate ring to the appropriate bayonet connection, the combination can be undone where required by rotating the housing of the QRA10 or AGG16.C

☞ Note!
AGG02 or AGG03 can also be fitted in the mounting coupling D of the AGG16.C or the QRA10.

Nipple AGG05

1 in. nipple AGG05 for connecting the mounting coupling D to the AGG07 ball head.

Ball head AGG07

AGG07 with 1 in. internal thread. Connection on AGG05 and for use with the mounting coupling D and AGG06. The AGG07 is used for mounting on a rigid surface, such as the boiler wall. It facilitates optimum adjustment of the viewing angle.

Accessories combinations

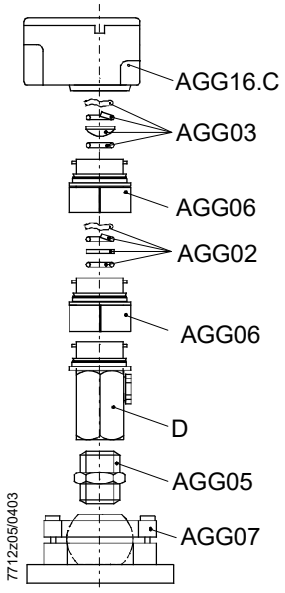

Type summary

When ordering, please give type references according to the *Type summary*.

Flame detectors

Article no.	Type reference	Sensitivity	Flange and clamp	Terminal cover	Spare UV tube
BPZ:QRA2	QRA2	Normal	Without	Black	AGR 4 502 1131 0
BPZ:QRA2(1)	QRA2(1)	Normal	With 4 241 8855 0 / 4 199 8806 0	Black	AGR 4 502 1131 0
BPZ:QRA2(2)	QRA2(2)	Normal	With 4 241 8898 0 / 4 199 8806 0	Black	AGR 4 502 1131 0
BPZ:QRA2.9 [1])	QRA2.9 [1])	Normal	Without	Black	AGR 4 502 1131 0
BPZ:QRA2M	QRA2M	High	Without	Green	AGR 4 502 4065 0
BPZ:QRA2M(1)	QRA2M(1)	High	With 4 241 8855 0 / 4 199 8806 0	Green	AGR 4 502 4065 0
BPZ:QRA2M(2)	QRA2M(2)	High	With 4 241 8898 0 / 4 199 8806 0	Green	AGR 4 502 4065 0

1) With heat-resistant housing for ambient temperatures up to 200 °C (short-time, up to a few seconds)

Article no.	Type reference	Sensitivity	Flange and clamp	Terminal cover	Spare UV tube
BPZ:QRA10.C	QRA10.C	Normal	---	---	AGR 4 502 1131 0
BPZ:QRA10M.C	QRA10M.C	High	---	---	AGR 4 502 4065 0

☞ Note
Mounting instructions for replacing the spare UV cell, refer to 4 319 9513 0 (M7712.5)!

Article no.	Type reference	Sensitivity	Detector tube length	Mains voltage	Spare UV tube
BPZ:QRA53.E27	QRA53.E27	Normal	125 mm	AC 220...240 V	AGR 4 502 4065 0
BPZ:QRA53.E17	QRA53.E17	Normal	125 mm	AC 100...110 V	AGR 4 502 4065 0
BPZ:QRA53.G27	QRA53.G27	High	125 mm	AC 220...240 V	AGR 4 502 4065 0
BPZ:QRA53.G17	QRA53.G17	High	125 mm	AC 100...110 V	AGR 4 502 4065 0
BPZ:QRA55.E27	QRA55.E27	Normal	69 mm	AC 220...240 V	AGR 4 502 4065 0
BPZ:QRA55.E17	QRA55.E17	Normal	69 mm	AC 100...110 V	AGR 4 502 4065 0
BPZ:QRA55.G27	QRA55.G27	High	69 mm	AC 220...240 V	AGR 4 502 4065 0
BPZ:QRA55.G17	QRA55.G17	High	69 mm	AC 100...110 V	AGR 4 502 4065 0

☞ Note
Mounting instructions for replacing the spare UV cell, refer to 4 319 9506 0 (M7712.1)!

☞ Note
All QRA5s are delivered complete with clamp. The connection requires an AGM19 connection cable (refer to *Accessories for QRA5*).

BOONYIUM AND ASSOCIATES LIMITED
1314-1322 Srinakarin Road, On Nut, Suanluang, Bangkok 10250, THAILAND
Tel. 02 322 9365-66(Burner Section)
http://www.boonyium.co.th Email: burnerinfo@boonyium.co.th

Article no.	Type reference	Sensitivity	Detector tube length	Mains voltage	Spare UV tube
BPZ:QRA73.A27	QRA73.A27	Normal	125 mm	AC 230 V	AGR 4 502 4065 0
BPZ:QRA73.A17	QRA73.A17	Normal	125 mm	AC 120 V	AGR 4 502 4065 0
BPZ:QRA75.A27	QRA75.A27	Normal	69 mm	AC 230 V	AGR 4 502 4065 0
BPZ:QRA75.A17	QRA75.A17	Normal	69 mm	AC 120 V	AGR 4 502 4065 0

☞ Note!
Mounting Instruction for replacing of spare UV tube, refer to 74 319 0654 0 (M7712.6)!

☞ Note
All QRA7s are delivered complete with clamp. The connection requires an AGM23 / AGM23U connection cable (refer to *Accessories for QRA7*).

Accessories

Accessories for QRA2 and QRA5 and QRA7 when ordered as single items

Part	For use with	Article no. / Part number
Flange rounded [1])	QRA2	BPZ:4 241 8855 0
Flange straight [2])	QRA2	BPZ:4 241 8898 0
Clamp [1]) [2])	QRA2	BPZ:4 199 8806 0
Clamp for direct mounting	QRA5 / QRA7	BPZ:4 199 1034 0

1) Supplied with QRA2 (1) types
2) Supplied with QRA2 (2) types

Accessories for QRA2

AGG09 IP40-Kit
Article no.: **BPZ:AGG09**
- cable sealing element Ø 5...8 mm

Accessories for QRA5 / QRA7

AGG16.C adapter
Article no.: **BPZ:AGG16.C**
- for flame detector mounting QRA53 and QRA55 / QRA7

AGM19 connecting cable
Article no.: **BPZ:AGM19**
- cable length 2 m
- with plug for QRA53, QRA55

KF8832 unit for measuring the detector current
Article no.: **BPZ:KF8832**
- with QRA53, QRA55 recommended for use with detector types up to the C-series

AGM23 connecting cable
Article no.: **BPZ:AGM23**
- cable length 2 m
- with plug for QRA7

AGM23U connecting cable
Article no.: **BPZ:AGM23U**
- cable length 4 m
- with plug for QRA7
- US design

Accessories for QRA10
and AGG16.C

AGG02 heat insulation glass
Article no.: **BPZ:AGG02**
- with spring washer and O-ring
- Refer to Mounting Instruction 4 319 9511 0 (M7712)

AGG03 quartz-glass lens
Article no.: **BPZ:AGG03**
- with spring washer and O-ring
- for detectors of the B-series, lens AGG01 is available
- Refer to Mounting Instruction 4 319 9511 0 (M7712)

AGG05 nipple 1 in.
Article no.: **BPZ:AGG05**

AGG06 glass and quartz-glass lens holder
Article no.: **BPZ:AGG06**
- with intermediate ring

AGG07 ball head
Article no.: **BPZ:AGG07**
- with 1 in. internal thread
- swivel range 13°

AGG08 IP65-kit for QRA10
Article no.: **BPZ:AGG08**
- for different types of cable diameter

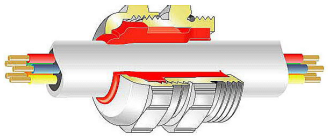

Cable sealing element ∅ in mm	**Color**
4...6,5 mm	Yellow
6,5...9,5	Black
9...15	Red

Technical data

General detector data	Average life of UV cell	Approx. 10,000 hours at max. 50 °C, higher ambient temperatures reduce considerably the cell's life
	Perm. combustion chamber pressure	
	- QRA10	Max. 50 mbar
	- QRA10 + AGG03 or AGG02	Max. 500 mbar
	Safety class	
	- QRA2	II
	- QRA10	I
	- QRA5x.E / QRA5x.G	I
	- QRA7	I
	Degree of protection	
	- QRA2	IP20 ☞ Note! IP40 conforming to DIN EN 60529 when using adequate cable entries (e.g. AGG09).
	- QRA10	IP54 (IP65 with AGG08)
	- QRA5x.E / QRA5x.G	IP65
	- QRA7	IP65
	Mounting position	Optional
	Weight	
	- AGG01	Approx. 10 g
	- AGG02	Approx. 10 g
	- AGG03	Approx. 10 g
	- AGG05	Approx. 170 g
	- AGG06	Approx. 160 g
	- AGG07	Approx. 1330 g
	- AGG16.C	Approx. 650 g
	- QRA2	Approx. 46 g
	- QRA10	Approx. 740 g
	- QRA10 + AGG03	Approx. 750 g
	- QRA5x.E, QRA5x.G	Approx. 700 g
	- QRA7	Approx. 700 g
	Ignition cable (see *Technical data* for the relevant burner control)	
	- QRA2	Supplied by customer Recommended: H05VV-F 2 x 0.75 Observe the application standards!
	- QRA10	Supplied by customer Recommended: H05VV-F 3 x 0.75 Observe the application standards!
	- QRA53 / QRA55	Connecting cable AGM19
	- QRA73 / QRA75	Connecting cable AGM23

Technical data (cont'd)

Environmental conditions

Storage	IEC 60721-3-1
Climatic conditions	Class 1K3
Mechanical conditions	Class 1M2
Temperature range	-20...+60 °C
Humidity	<95 % r.h.
Transport	IEC 60721-3-2
Climatic conditions	Class 2K2
Mechanical conditions	Class 2M2
Temperature range	-20...+60 °C
Humidity	<95 % r.h.
Operation	IEC 60721-3-3
Climatic conditions	Class 3K3
Mechanical conditions	Class 3M3
Temperature range	-20...+60 °C
Humidity	<95 % r.h.
Installation altitude	Max. 2,000 m above sea level

Caution!
Condensation, formation of ice and ingress of water are not permitted!
If not observed, the safety functions are no longer ensured and there will be a risk of electric shock!

Function

With this type of flame supervision, the UV radiation emitted by gas or oil flames is used to generate the flame signal. The radiation detector consists of a UV-sensitive cell with 2 electrodes, which ignite when illuminated with radiation in the 190...270 nm range of the spectrum, thereby triggering a current in the flame detector circuit. The UV cell does not respond to glowing firebrick in the combustion chamber, daylight or light from boiler room illumination.

Dimensions in mm

QRA2

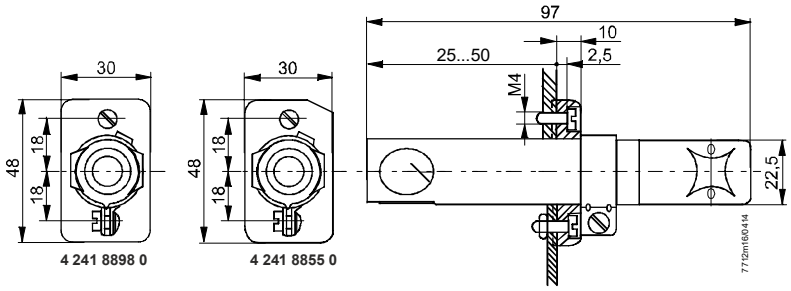

QRA10

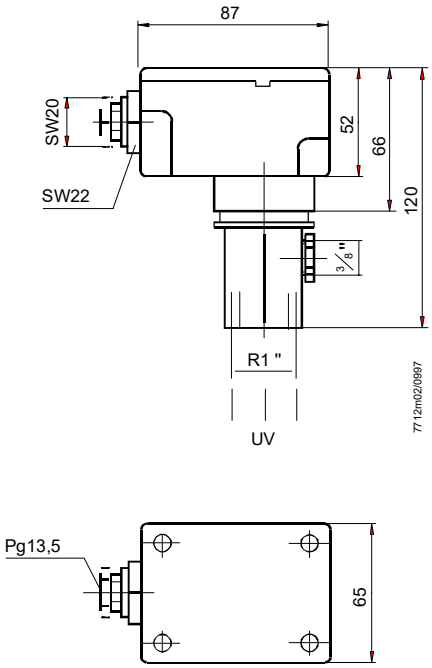

Dimensions in mm

QRA5x.E / QRA5x.G

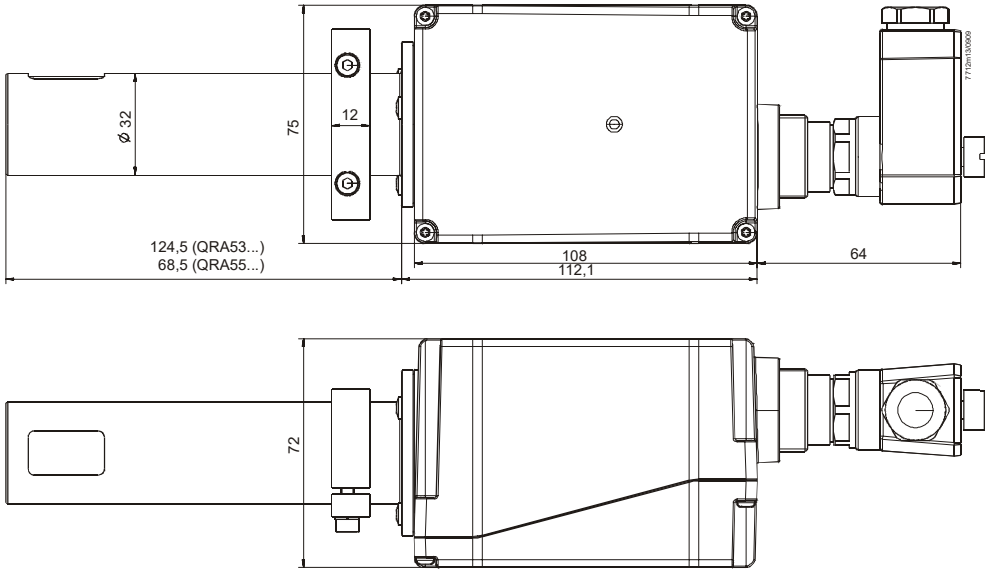

QRA5 with AGG05, AGG06, AGG07, AGG16.C and AGM19

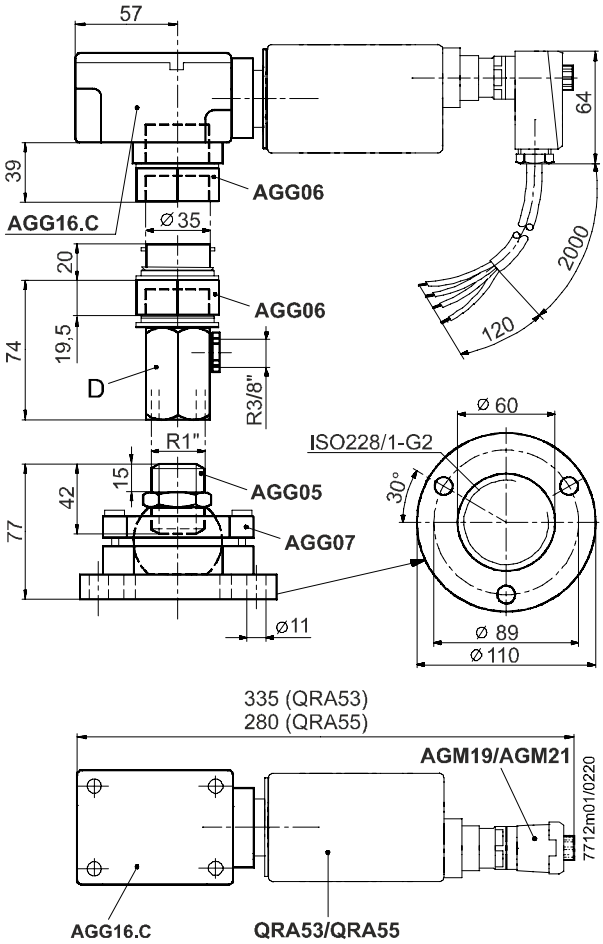

Dimensions in mm

QRA7 with AGM23

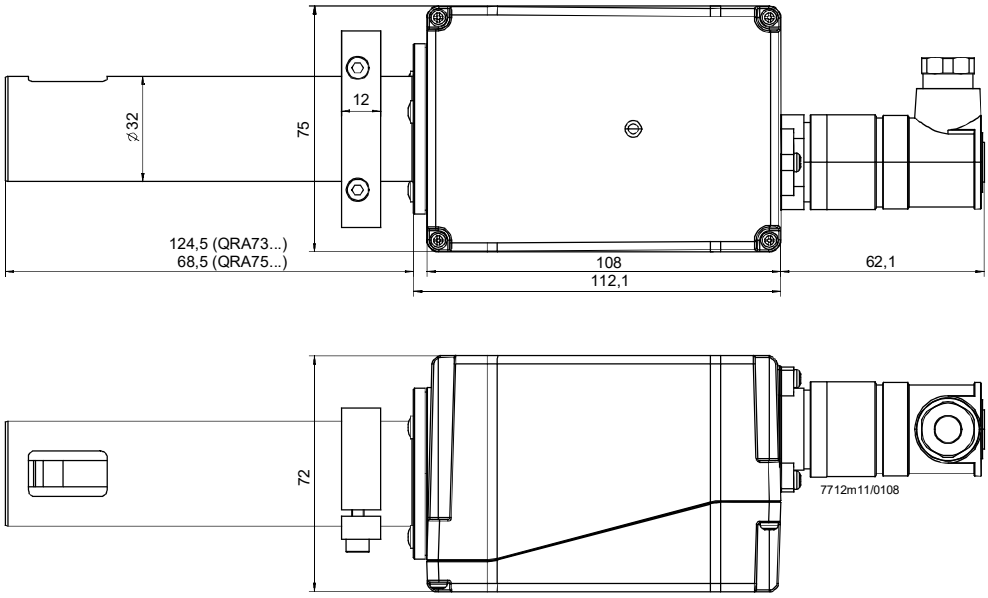

QRA7 with AGG05, AGG06, AGG07, AGG16.C and AGM23

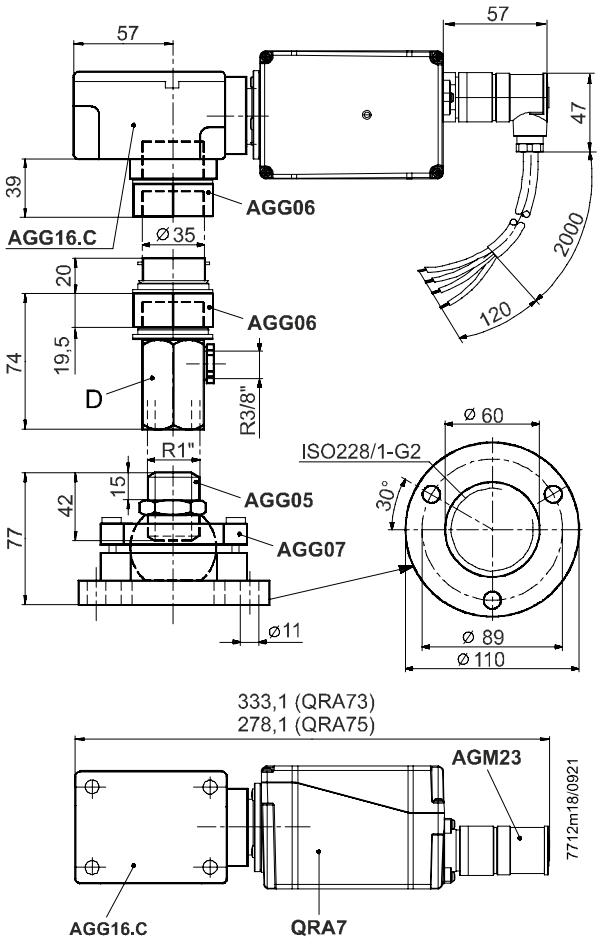

Dimensions in mm

QRA7 with AGM23U

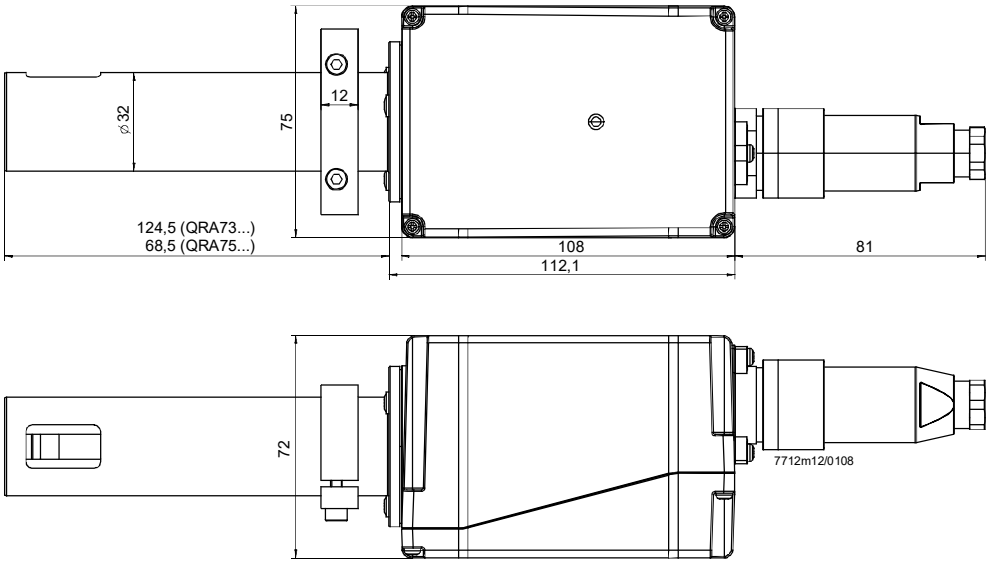

QRA7 with AGG05, AGG06, AGG07, AGG16.C and AGM23U

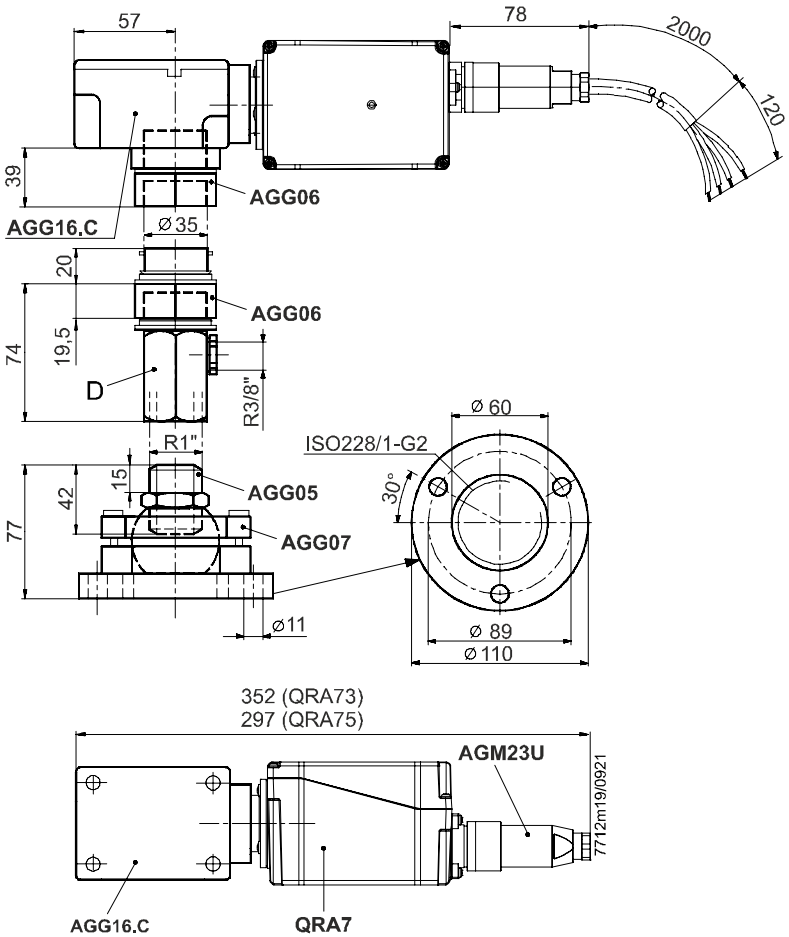

Dimensions (cont´d)

Dimensions in mm

Viewing angle with QRA5 / QRA7

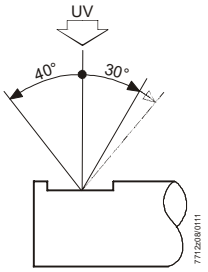

Accessories

4 199 1034 0

Clamp for direct mounting on the burner or the AGG16.C

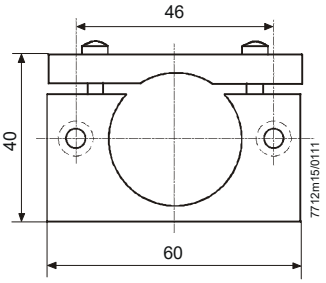

AGG02

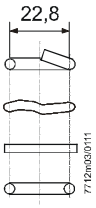

AGG03

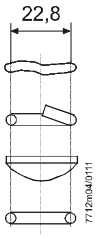

4 241 8855 0

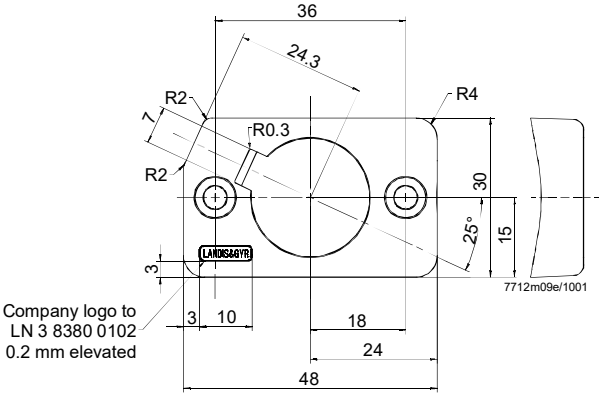

4 241 8898 0

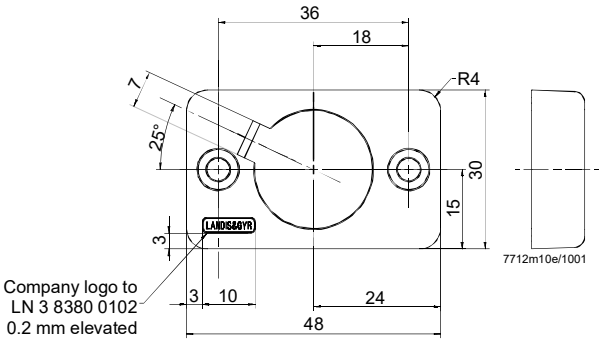

©2021 Siemens AG Smart Infrastructure, Berliner Ring 23, D-76437 Rastatt
Subject to change!

BOONYIUM AND ASSOCIATES LIMITED
1314-1322 Srinakarin Road, On Nut, Suanluang, Bangkok 10250, THAILAND
Tel. 02 322 9365-66(Burner Section)
http://www.boonyium.co.th Email: burnerinfo@boonyium.co.th