SIEMENS

Distributed By
BOONYIUM®
Since 1958
บริษัท บุญเยี่ยมและสหาย จำกัด
BOONYIUM AND ASSOCIATES LIMITED

7643

Open / Closed	Open / Closed with constant pressure governor	Open / Closed with differential pressure governor	Open / Closed with ratio pressure governor

SKP15

SKP25

SKP55

SKP75

Actuators for gas valves SKPx5...

- **OPEN/CLOSED safety shut-off function according to EN 161 in connection with the VGx/VRx valves from Siemens AG**
- **Damped opening (rapid closing)**
- **Very low power consumption**
- **Suitable for use with gases of gas families I...III**
- **Optionally with / without end switch (factory-set)**
- **Plug-in connection facility**
- **Electrical indication of operation**
- **Valve stroke indication**
- **Supplementary Data Sheets on valves (refer to «Use»)**
- **Models for USA on request**

The SKPx5 and this Data Sheet are intended for use by OEMs which integrate the actuators in their products.

Use

Modular concept

The SKPx5 actuator is designed for use with the following types of valves:

Type of valve	Medium	Data Sheet
VGG VGF	Natural gas Gases of gas families I...III	N7636
VGJ	Gases of gas families I...III	N7650
VGD2 VGD4	Natural gas Gases of gas families I...III	N7631
VRD	Natural gas Biogas Gases of gas families I...III	N7631
VRF	Biogas (with SKP15, other actuators on request)	N7633

Actuators SKPx5 in general

The combination of an SKPx5 actuator and a valve performs the following functions:
- Safety shutoff valve (SKP15)
- Safety shutoff valve with gas pressure governor (SKP25, SKP55, SKP75)

Together with a valve, the electrohydraulically operated SKPx5 actuators are designed for use with gas types I…III and air, and are primarily used in gas-fired combustion plants. The SKPx5 actuators open slowly and close quickly. The SKPx5 actuator can be supplied with end switches (for indicating the fully closed position). For information about valve sizing, refer to the «Valve sizing chart» in the Data Sheet of the relevant valve.

If the SKPx5 actuators are used with gases other than those in gas families I…III, Siemens AG assumes no responsibility for the durability and lifetime of the SKPx5 actuators.

All SKPx5 actuators can be combined with any of these valves.

SKP15

Together with a VGx/VRx valve, the electrohydraulically operated SKP15 works exclusively as a safety shutoff valve (OPEN/CLOSED) and is primarily used in gas-fired combustion plants. The SKP15s open slowly and close quickly. A valve stroke display on the SKP15 can only be delivered with end switches.

SKP25

The SKP25 operates with a gas pressure governor and controls the gas pressure according to the setpoint preselected with the setpoint spring or air pressure signal.

Its field of use is primarily forced draft gas burners
- with mechanical air / fuel ratio control (SKP25.0)
- with electronic air / fuel ratio control (SKP25.0)
- with 2-stage setpoint changeover (SKP25.2)
- with proportionate governor (SKP25.3)
- with high-pressure control up to 200 kPa (SKP25.4)
- with zero pressure governor (SKP25.6)
- with constant pressure control, but with electric pressure setpoint adjustment (SKP25.0 with AGA30.7 and SAS)

SKP25.0 with AGA30.7 and SAS

The SKP25.0 with AGA30.7 and SAS solution enables motorized pressure setpoint adjustment

- for motorized setting or correction of the setpoint
- for atmospheric and comparable burner operating conditions, typical output modulation multistage or shifting < 1 : 5
- not for gas-air ratio combined systems (e.g. class C in accordance with EN 12067-2)
- SKP25.0 (with AGA30.7 and SAS) must not be used in applications that require mechanical operating conditions higher than class 3M1 (EN 60721-3-3). Vibrations are not permitted. Corrective measures must be implemented on the plant in individual cases.

SKP55

The SKP55 operates with a differential pressure governor and controls a differential gas pressure according to a differential air pressure. The ratio of the differential pressures is 1:1 and remains constant across the entire air range.

Its field of use is predominantly

- combustion plant with combined heat recovery systems
- plant where pressure conditions in the burner and combustion chamber do not change in proportion to load changes
- burners with adjustable air / fuel mixing devices in the burner head
- plant with negative pressure levels on the gas or air side

SKP75

The SKP75 operates as a ratio pressure governor and provides control of the gas pressure depending on the pressure of the combustion air, ensuring that the adjustable gas / air ratio remains constant across the entire load range. Its field of use is primarily modulating forced draft gas burners.

Warning notes

For additional safety notes, refer inside of Data Sheet!

To prevent injury to persons, damage to property or the environment, the following warning notes must be observed!

- Do not open, interfere with or modify the actuators!
- Any opening of the actuator, replacement of parts or modifications to the original product is the user's responsibility and carried out at his own risk
- All activities (mounting, installation and service work, etc.) must be performed by qualified staff
- When used in connection with gas, the actuators constitute part of the safety equipment
- Not suitable gases or gas components causes loss of the safety shutoff function
- Check to ensure that the impulse pipes are correctly fitted and tight (SKP25, SKP55, SKP75)
- Fall or shock can adversely affect the safety functions. Such actuators must not be put into operation, even if they do not exhibit any damage
- Each time work has been carried out (mounting, installation, service work, etc.), check to ensure that wiring is in an orderly state and make the safety checks as described in «Commissioning notes»
- If mains voltage is fed to the end switch (CPI), protective earth must be connected to the actuator via the same plug (AGA65)
- Use of connectors conforming to DIN EN 175301-803-A is mandatory
- The connectors used must feature cable strain relief
- Solar radiation or formation of ice are not permitted!

SKP25.2

When using SKP25.2, relevant interference suppression measures (EMC) must be implemented on the plant side.
The magnet can reach high temperatures if activated for longer periods of time.

The SKPx5.xx1xx are supplied with the end switch factory-set.

Design of the gas train

If the available gas pressure exceeds the maximum permissible operating pressure of the valve (VGx/VRx) or the SKPx5 respectively (refer to the data sheet for the relevant valve), it must be lowered by an upstream pressurestat. The gas pressure switch for lack of gas must always be fitted upstream of the valve (VGx/VRx) when used in connection with the SKPx5.

SKP25

Installed SKP25s with overpressure protection on the outlet side are switched off and close against the gas pressure. The SKP25 does not require an exhaust line.

Note!
When setting the overpressure limit, ensure it is lower than the load limit for the plant.

SKP25, SKP55, SKP75

The impulse pipes must be installed such that the differential pressure can be acquired with no disturbance (unfavorable flow conditions). Pressure test points must not protrude and be flush with the inside diameter of the pipe or duct wall. The impulse lines to the governor should be as short as possible, enabling the governor to respond quickly should sudden load changes occur. The inside diameter of the impulse pipes must be a minimum of 6 mm. In connection with the SKP25, the 1/4“ nozzles on the outlet side of the VGx/VRx valves can be used as pressure test points (prerequisite: gas control pressure setpoint >1 kPa).

CAUTION!
Risk of gas leak!
The pressure test point must be closed again once the pressure has been measured. It is essential to check the seal is tight.
Failure to observe this information poses a risk of personal injury, property damage, and environmental harm.

PLEASE NOTE!
Risk of gas leak and loss of control function!
The maximum permissible inlet pressure of the SKPx5 with VGx/VRx combination is determined by the component installed in the application with the lowest maximum permissible operating pressure in each case. Failure to observe this information poses a risk of personal injury, property damage, and environmental harm.

SKP75

- Installation of impulse pipes:
  In the case of unsafe combustion chamber pressure pipes (e.g. resulting from potential leaks). The setting must also be checked during operation without having the combustion chamber pipe connected, especially with respect to maximum burner capacity. The impulse pipes must be fitted such that the differential pressure can be acquired with no disturbance. With gas / air ratios >3, the impulse pipes for the combustion air and the combustion chamber pressure must have an inside diameter of at least 8 mm. The impulse pipe for the combustion chamber pressure must be fitted such that the gases will cool down in the vicinity of the impulse pipe and condensing gases cannot enter the governor but will return to the combustion chamber.

  Warning!
  If there is a risk of the impulse pipes being exposed to heat, all impulse pipes must be made from suitable metal material

  Recommendations:
  – The gas pressure should be acquired at a distance of 5 times the nominal pipe size downstream from the valve
  – that the lateral pressure test points on the valve should not be used for picking up the pressure.

- Considering the combustion chamber pressure:
  If the resistance value of the combustion chamber / heat exchanger / stack system is constant, the combustion chamber pressure changes in proportion to the gas and combustion air pressure as the burner's output changes. In that case, the combustion chamber pressure need not be fed to the SKP75 as a disturbance variable. However, if the combustion chamber pressure does not change to the same extent as the gas and air pressure – as this is the case in plants with flue gas fan or modulating flue gas damper – the combustion chamber pressure must be fed to the SKP75 as a disturbance variable, enabling the governor to counteract. When used with hydrogen-containing gases or pure hydrogen, it is essential to connect the impulse pipe for the combustion chamber pressure
- If the SKPx5 are operated until the end of their lifecycle, the decreasing drive power can result in a lower gas quantity or gas pressure on the outlet of the gas fitting. If the use requires a minimum pressure behind the gas fitting, the minimum pressure must be monitored

- Ensure that the relevant national safety regulations are complied with
- The quadratic arrangement of the fixing holes allows the actuator to be fitted in 4 different positions on the VGx/VRx valve, each step being 90° (depending on the type of VGx/VRx valve)
- The actuator can be mounted or replaced while the system is under pressure; sealing material is not required
- SKP25 / SKP55 / SKP75:
  SKPx5 with pressure control function have a vent opening on the pressure governor. Measures must be taken in the application to prevent the vent opening from being blocked

Warning!
Condensation, formation of ice and ingress of water are not permitted. If this is not observed, there is a risk of loss of safety functions and a risk of electric shock.

Sealing / tightness

- Check the tightness when all components are connected

SKPx5 general

- Electrical commissioning may only be carried out with the SKPx5 fitted to the valve; otherwise the SKPx5 may be damaged
- Power is supplied and connection of the end switch is made directly via a connecting cable (conforming to DIN EN 175301-803-A)
- The end switch is factory-set
- The pump's stem must not be pulled out using the over stroke element since that part could become loose

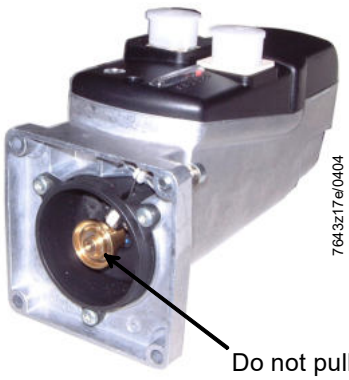

Functional principle of the 1-stage **SKP15** with safety shut-off function

When power is applied, the pump will be activated and the control valve closed. Oil is now pumped from the chamber below the piston to the stroke chamber above the piston. The oil pressure causes the piston to move downward, thereby opening the valve – against the pressure of the closing spring. The pump remains energized until the closing command is given. When power is removed, or in the event of a power failure, the pump will be deactivated and the control valve opened so that the closing spring pushes the piston back. The return flow system is sized such that the counter-stroke required for reaching the fully closed position is completed within about 0.6 seconds.

SKP15 complete with valve

(Schematic drawing)

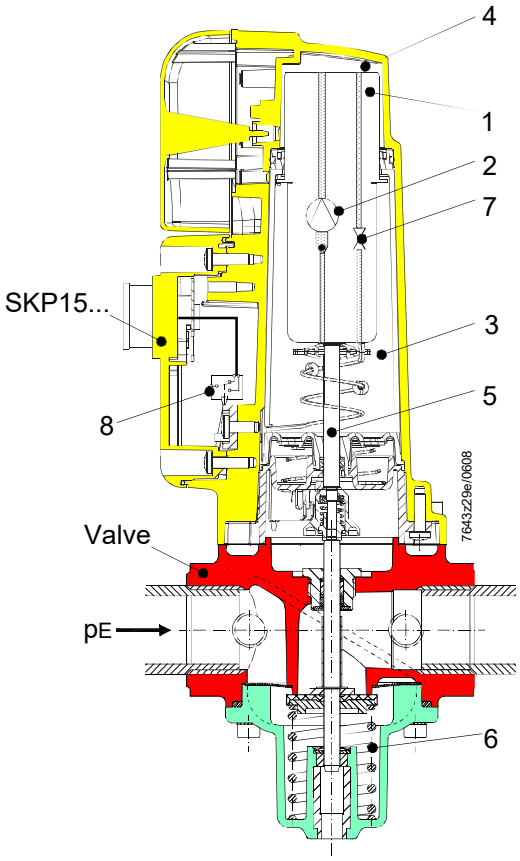

Legend

1…4	Electronic actuator system
5	Stem
6	Valve's closing spring
7	Control valve
8	End switch (optional)

SKP25, SKP55 and SKP75

The functioning principle (safety shutoff feature) is identical to that of the SKP15, but with the help of their pneumatic governor, the SKP25, SKP55 and SKP75 also control a bypass valve in the hydraulic circuit and thus the valve‘s opening position.

Please note!
Risk of gas leak and loss of control function!
The operating pressure of valves with a maximum permissible inlet pressure of >120 kPa must be limited to 120 kPa in combination with the following SKPx5s:

- **SKP25.0**
- **SKP25.2**
- **SKP25.3**
- **SKP25.6**
- **SKP55**
- **SKP75**

The SKP25.4 extends the operating pressure range to 230 kPa (or 300 kPa in Japan).

SKP55

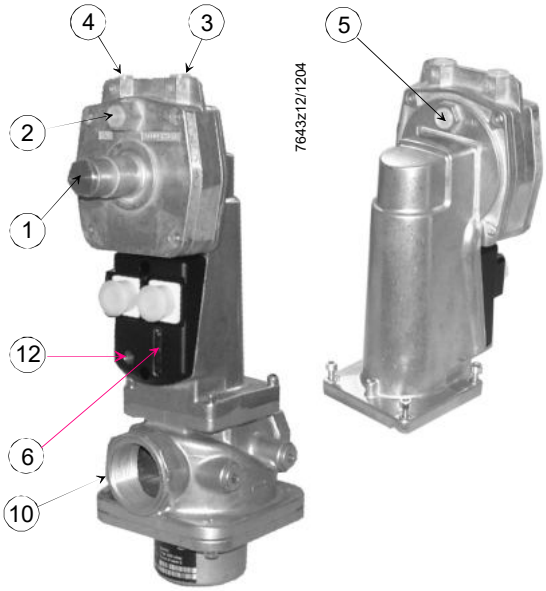

① Adjustment of parallel displacement of working characteristic
* Check combustion values with cap fitted

② Test point for air pressure (+)

③ Test point for air pressure (-)

④ Test point for gas pressure (-)

⑤ Test point for gas pressure (+)

⑥ Valve stroke indication

⑦ Spring (parallel displacement)

⑧ Actuating device (air)

⑨ Orifice (gas)

⑩ Valve

⑪ Orifice (air)

⑫ Indication of operating state (LED)

SKP55

Adjustment of governor on modulating burners prior to startup:

- Setting screw ① on the SKP55 should be set to a gas / air ratio curve which passes through the neutral point. The SKP55 is supplied with that factory setting. Adjustment in the field can be made as follows:

☞ Note:
Fit cap again before measuring the combustion value and after the setting is made.
Turn setting screw ① in counterclockwise direction until spring ⑦ is completely loose. Shut off the gas supply upstream of the SKP55. Switch on the SKP55. Turn setting screw ① in clockwise direction until valve opens

- Bring the adjustable orifice ⑨ to the precalculated value. That value with the same pressure differential on the air and gas side must lead to practically stoichiometric combustion
- Start the burner and run it to about 90 % of the high-fire
- Measure the combustion quality and make adjustments of the flow rate with the adjustable orifice ⑨ until optimum measured values are reached (fine adjustment)
- Return to low-fire operation. Check the combustion and readjust if necessary the position of the working characteristic with the setting screw ① on the SKP55 until optimum measured values are reached. Clockwise rotation → more gas. Counterclockwise rotation → less gas, that is, parallel displacement of the working characteristic towards gas pressure elevation or gas pressure lowering
- Limit the air damper ⑧ for low-fire operation
- If a significant parallel displacement of the working characteristic was required, the setting must be checked again at 90 % of the high-fire and then readjusted, if required
- Run the burner to the intended high-fire with the help of the air damper ⑧ and limit the SKP55 position for that load
- Check the flue gas values at a few positions of the load range. Make readjustments in the high-fire range with the adjustable orifice ⑨, and in the low-fire range with setting screw ① on the governor of the SKP55.

Note
Only in connection with Siemens VGx/VRx valves.

In combination with VGx

Applied directives:

- Low-voltage directive 2006/95/EC
- Directive for pressure devices 2014/68/EU
- Gas Appliances Regulation (EU) (EU) 2016/426
- Electromagnetic compatibility EMC (immunity) *) 2014/30/EU

*) Compliance with EMC emissions requirements must be checked after the actuator has been installed in the work equipment

Compliance with the regulations of the applied directives is verified by the adherence to the following standards / regulations:

- Pressure regulators and associated safety devices for gas appliances DIN EN 88-1
  Part 1: Pressure regulators for inlet pressures up to and including 50 kPa
- SKP25.4 only DIN EN 88-2
  Pressure regulators and associated safety devices for gas appliances
  Part 2: Pressure regulators for inlet pressures above 500 mbar up to and including 5 bar
- Multifunctional controls for gas burning appliances DIN EN 126
- Automatic shut-off valves for gas burners and gas appliances DIN EN 161
- Safety and control devices for gas burners and gas burning appliances DIN EN 13611
- Automatic electrical controls for household and similar use DIN EN 60730-1
  Part 1: General requirements

The relevant valid edition of the standards can be found in the declaration of conformity!

EAC Conformity mark (Eurasian Conformity mark)

UKCA conformity mark (UK)

China RoHS
Hazardous substances table:
http://www.siemens.com/download?A6V10883536

For use in the US/Canada, the SKPx5s are identified with a 'U' (see example) and are approved by FM Approvals, UL, and CSA (for example: SKP25.003U1, refer to separate data sheets [available on request]).

BOONYIUM AND ASSOCIATES LIMITED
1314-1322 Srinakarin Road, On Nut, Suanluang, Bangkok 10250, THAILAND
Tel. 02 322 9365-66(Burner Section)
http://www.boonyium.co.th Email: burnerinfo@boonyium.co.th

Life cycle

The combination valve and actuator have a designed lifetime* of

Nominal size	Burner startup cycles
≤25 DN	200.000
25...80 DN	100.000
80...150 DN	50.000

which, under use of gases to EN 437 (or DVGW specification G260).

This lifetime is based on the endurance tests in the standard EN 161. A summary of the conditions has been published by the European Control Manufacturers Association (Afecor) (www.afecor.org).

The designed lifetime is based on use of the valve and actuator according to the manufacturer's Data Sheet. When reaching the designed lifetime in terms of the number of burner startup cycles or the respective time of usage, valve and actuator must be checked by authorized personnel and, if necessary, replaced.

* The designed lifetime is not the warranty time specified in the Terms of Delivery.

Disposal notes

The actuator contains electrical and electronic components and hydraulic oil and must not be disposed of together with domestic waste. Local and currently valid legislation must be observed.

Type summary (other types of actuators on request)

The complete gas shutoff assembly or pressure governor assembly consists of actuator and valve.

SKP15

	Article no.	Type	Article no.	Type
Mains voltage	**AC 120 V**		**AC 230 V**	
1-stage opening and closing, without end switch, without valve stroke indication	**BPZ:SKP15.000E1**	**SKP15.000E1**	**BPZ:SKP15.000E2**	**SKP15.000E2**
1-stage opening and closing, with end switch, with valve stroke display	**BPZ:SKP15.001E1**	**SKP15.001E1**	**BPZ:SKP15.001E2**	**SKP15.001E2**

Type summary (other types of actuators on request)

The complete gas shutoff assembly or pressure governor assembly consists of actuator and valve.

SKP25

	Article no.	Type	Article no.	Type
Mains voltage	**AC 120 V**		**AC 230 V**	
1-stage opening and closing, with end switch, with pressure governor up to 2.2 kPa, other pressure ranges via change setpoint spring possible → refer to accessories	**BPZ:SKP25.001E1** [2])	**SKP25.001E1** [2])	**BPZ:SKP25.001E2** [2])	**SKP25.001E2** [2])
1-stage opening and closing, without end switch, with pressure governor up to 2.2 kPa, other pressure ranges via change setpoint spring possible → refer to accessories	**BPZ:SKP25.003E1** [2])	**SKP25.003E1** [2])	**BPZ:SKP25.003E2** [2])	**SKP25.003E2** [2])
1-stage opening and closing, without end switch, with pressure governor up to 2.2 kPa, other pressure ranges via change setpoint spring possible, with integrated damping throttle AGA25.2 → refer to Accessories	**---**	**---**	**BPZ:SKP25.003E2Y**	**SKP25.003E2Y**
2-stage opening and closing, with end switch, with pressure governor up to 6 kPa	**BPZ:SKP25.201E1**	**SKP25.201E1**	**BPZ:SKP25.201E2**	**SKP25.201E2**
2-stage opening and closing, without end switch, with pressure governor up to 2 kPa	**BPZ:SKP25.201E1L**	**SKP25.201E1L**	**BPZ:SKP25.201E2L**	**SKP25.201E2L**
2-stage opening and closing, without end switch, with pressure governor up to 6 kPa	**---**	**---**	**BPZ:SKP25.203E2**	**SKP25.203E2**
2-stage opening and closing, without end switch, with pressure governor up to 2 kPa	**---**	**---**	**BPZ:SKP25.203E2L**	**SKP25.203E2L**
1-stage opening and closing, with end switch, with stroke indication, proportionate governor version	**---**	**---**	**BPZ:SKP25.301E2** *)	**SKP25.301E2** *)
1-stage opening and closing, without end switch, proportionate governor version	**---**	**---**	**BPZ:SKP25.303E2**	**SKP25.303E2**
1-stage opening and closing, with end switch, with pressure governor up to 200 kPa, high-pressure version, other pressure ranges via change setpoint spring possible → refer to accessories	**BPZ:SKP25.401E1** [3])	**SKP25.401E1** [3])	**---**	**---**
1-stage opening and closing, without end switch, with pressure governor up to 200 kPa, high-pressure version, other pressure ranges via change setpoint spring possible → refer to accessories	**BPZ:SKP25.403E1** [2])	**SKP25.403E1** [2])	**BPZ:SKP25.403E2** [2])	**SKP25.403E2** [2])
1-stage opening and closing, with end switch, for zero pressure governor version	**---**	**---**	**BPZ:SKP25.601E2** *)	**SKP25.601E2** *)
1-stage opening and closing, without end switch, for zero pressure governor version	**---**	**---**	**BPZ:SKP25.603E2** *)	**SKP25.603E2** *)

[1]) Factory setting 1.5 kPa
[2]) Factory setting 120 kPa
*) On request

Type summary (other types of actuators on request)

SKP55

	Article no.	Type	Article no.	Type
Mains voltage	**AC 120 V**		**AC 230 V**	
1-stage opening and closing, with end switch, with differential pressure governor	**BPZ:SKP55.001E1**	**SKP55.001E1**	**BPZ:SKP55.001E2**	**SKP55.001E2**
1-stage opening and closing, without end switch, with differential pressure governor	**BPZ:SKP55.003E1**	**SKP55.003E1**	**BPZ:SKP55.003E2**	**SKP55.003E2**

SKP75

	Article no.	Type	Article no.	Type
Mains voltage	**AC 120 V**		**AC 230 V**	
1-stage opening and closing, with end switch, with ratio pressure governor	**BPZ:SKP75.001E1**	**SKP75.001E1**	**BPZ:SKP75.001E2**	**SKP75.001E2**
1-stage opening and closing, without end switch, with ratio pressure governor	**BPZ:SKP75.003E1**	**SKP75.003E1**	**BPZ:SKP75.003E2**	**SKP75.003E2**
1-stage opening and closing, with end switch, with ratio pressure governor, with greater parallel displacement	---	---	**BPZ:SKP75.501E2**	**SKP75.501E2**

²) Factory setting 1.5 kPa

Ordering examples

Please provide the complete type reference of the SKPx5 – refer to the *Type summary* chapter. All components must be ordered as separate items.

Example of SKP15

Actuator with safety shutoff function
- Open / closed
- With end switch
- For AC 230 V / 50 Hz **SKP15.001E2**

Connector valve actuator (plug) **AGA64**
Connector end switch (plug) **AGA65**

Combination of SKPx5 and valve comprising:
- Valve
- SKP15.001E2 actuator
- Accessories

Order the required valves as separate items – refer to the relevant data sheets. The SKPx5 and the valve are supplied separately. Assembly is very straightforward and preferably made on the burner.

Example of SKP25

Gas pressure governor with safety shutoff function:
- Without end switch
- For AC 230 V / 50 Hz **SKP25.003E2**

Connector valve actuator (plug) **AGA64**

Combination of SKPx5 and valve comprising:
- Valve
- SKP25.003E2 actuator

Adapter plug **AGA62.000A000**

Article no.: **BPZ:AGA62.000A000**

For powering both SKPx5s on the valve (VGDx/VRDx) with a connector (AGA64).

Example: SKP15 / SKP25.2 with adapter plug AGA62.000A000

Central connection via AGA64
for the **separate** control
of valves 1 and valves 2
Facilitates valve prooving
via pressure switch between the
valves or
ignition via pilot burner

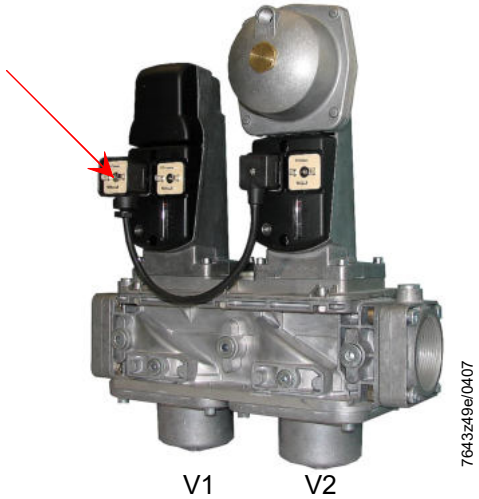

Heating element **AGA63.5A27**

Article no.: **BPZ:AGA63.5A27**

- Refer to Data Sheet N7923
- For use at low ambient temperatures (< -10...-20 °C)

Contact box for valve actuator (power supply) **AGA64**

Article no.: **BPZ:AGA64**

- Plug-in connector conforming to DIN EN 175301-803-A
- 3 pole + ⏚
- Dia. 6...9 mm / max. 1.5 mm²

Example: SKP15 / SKP25 with contact box AGA64

Contact box for end switch **AGA65**

Article no.: **BPZ:AGA65**

- Plug-in connector conforming to DIN EN 175301-803-A
- 3 pole + ⏚
- Dia. 4.5...9 mm / max. 1.5 mm²

Example: SKP15 / SKP75 with contact box AGA65

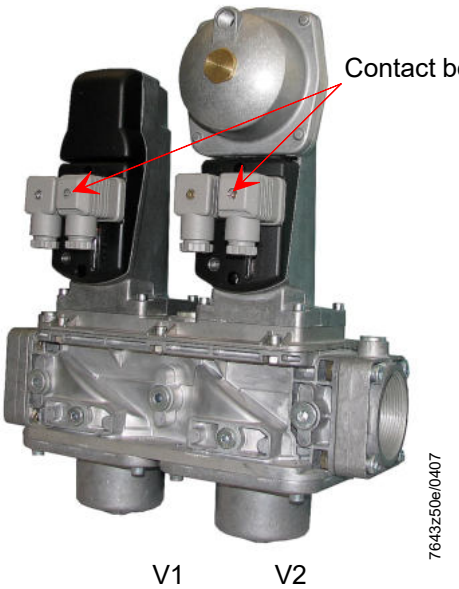

Contact box **AGA67**

Article no.: **BPZ:AGA67**

- For the power supply to the SKP25.2
- Plug-in connector conforming to DIN EN 175301-803-A
- With integrated bridge rectifier
- 2 pole +
- Dia. 6...8 mm / max. 1.5 mm²
- Including profile seal

Example: SKP15 / SKP25 with contact box AGA67

Contact box AGA67

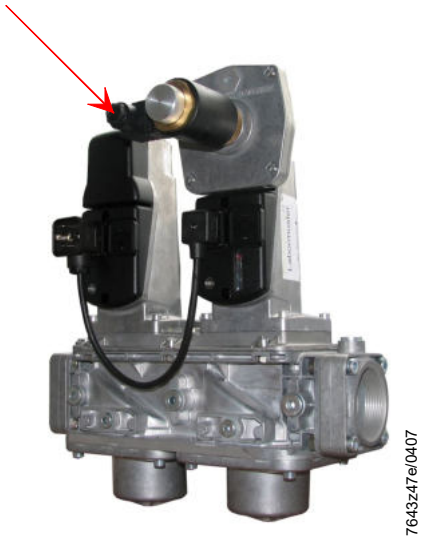

Adapter plug for AGA62.000A000 **AGA68**

Article no.: **BPZ:AGA68**

For common valve control

Example: SKP15 / SKP25 with adapter plug AGA68

Adapter plug AGA68

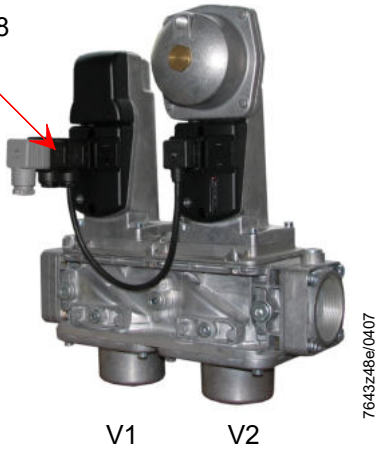

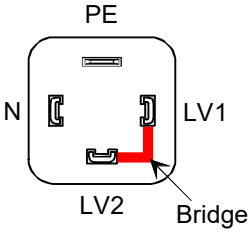

Accessories (not supplied as standard, to be ordered as separate items) (cont´d)

		Article no.	Type
	Motorized setpoint adjuster for SKP25.0 • For 5.5 mm stroke • Refer to Data Sheet N4581		**SAS...**
	Adaptation to SKP25 For motor pressure correction in conjunction with motorized setpoint adjuster SAS.	**S55851-Z401-A100**	**AGA30.7**
	Damping throttle for SKP25 • Standard version: Nozzle cross section for pressures greater than 20 mbar • Optional: Nozzle cross section for pressures less than 20 mbar	**BPZ:AGA25.2** **S55851-Z303-A100**	**AGA25.2** **AGA25.3**
	Damping throttle for SKP55 / SKP75 Optional, pipe connection for 6 mm dia.	**BPZ:AGA75**	**AGA75**

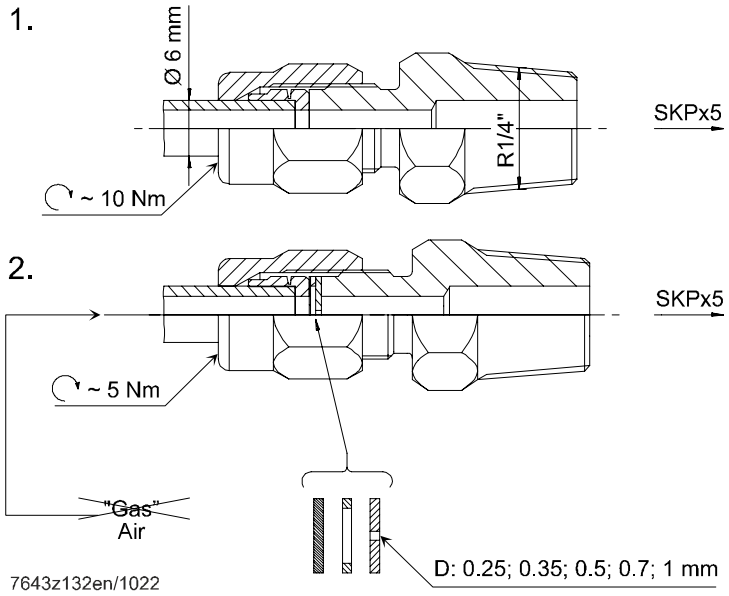

	Article no.	Type
Pressure-reducing T-piece for SKP75 Optional	**BPZ:AGA78**	**AGA78**

- 3 kPa with a PGas / PAir ratio of ≥2
- 5 kPa with a PGas / PAir ratio of ≤2

permitted for the controller, the pressure must be lowered with a pressure-reducing T-piece (AGA78) (also refer to *Technical data*).

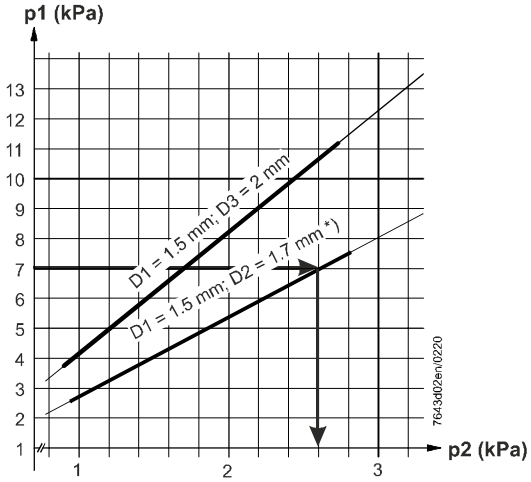

Example:
p1 = 7 kPa
D1 = 1.5 mm
D2 = 1.7 mm

Wanted: Air pressure signal «p2» for SKP75
p2 = 2.6 kPa

*) Factory setting

Air is continuously vented to the atmosphere via the damper (D2).
The pressure of the following medium will be reduced via throttle «D1». The illustration below shows the correlations.

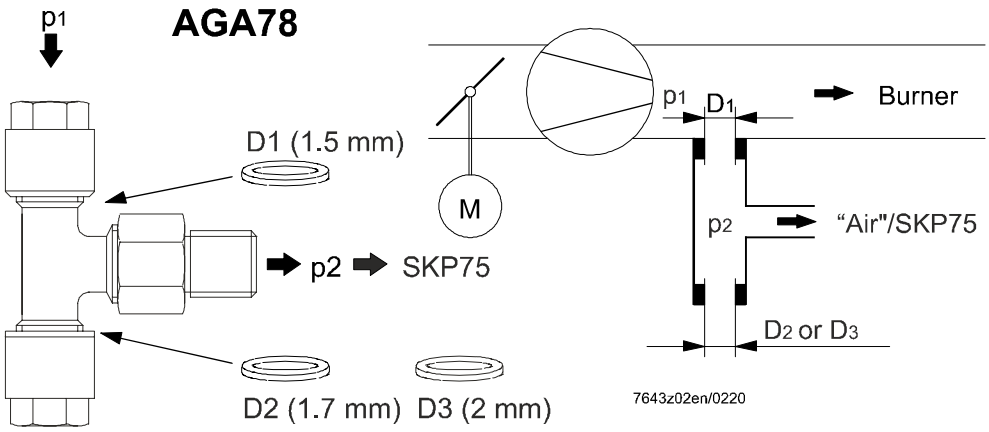

The pressure-reducing T-piece AGA78 is supplied ready for mounting, with D1 = 1.5 mm and D2 = 1.7 mm.
D3 with a diameter of 2 mm is included as a loose item.

Accessories (not supplied as standard, to be ordered as separate items) (cont´d)

Overview of the setpoint springs:

Pressure range	Color	Diameter in mm	Actuator SKP25.0	Actuator SKP25.3	Actuator SKP25.4	Accessories	Article no.	Type
0.5...3.5 kPa 2.5…5.5 kPa	Black	1	●	---	---	Required AGA30.7	**S55851-Z301-A100**	**AGA21**
1.5...12 kPa	Yellow/Gold	1.5	●	---	---	Required Optional AGA30.0	**BPZ:AGA22**	**AGA22**
7…70 kPa		1.5	---	---	●	Required Optional AGA30.0		
10...25 kPa	Red	1.8	●	---	---	Required Optional AGA30.1	**BPZ:AGA23**	**AGA23**
15...150 kPa		1.8	---	---	●	Required Optional AGA30.1		
0.2...5.5 kPa 1.7…7 kPa	Copper	1.4	●	---	---	Required AGA30.7	**S55851-Z302-A100**	**AGA26**
±0.15 kPa	Unpainted	0.6	---	●	---	None	**BPZ:AGA28**	**AGA28**
0.05...2.2 kPa	Unpainted	1.0	●	---	---	None	**BPZ:AGA29**	**AGA29**
10...36 kPa	Unpainted	2.0	●	---	---	Required AGA30.2 Order no: 7421500490	**BPZ:AGA30.2**	**AGA30.2**
30…200 kPa		2.0	---	---	●	Required AGA30.2 Order no: 7421500490		

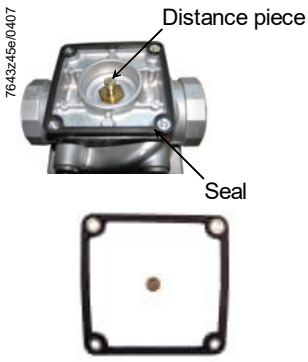

Gasket set **AGA66**

Article no.: **BPZ:AGA66**

- For mounting between the SKPx5 and the valve (VGx/VRx)
- Increases degree of protection from IP54 to IP65
- When using VGG single valves, data sheet N7636 must be observed

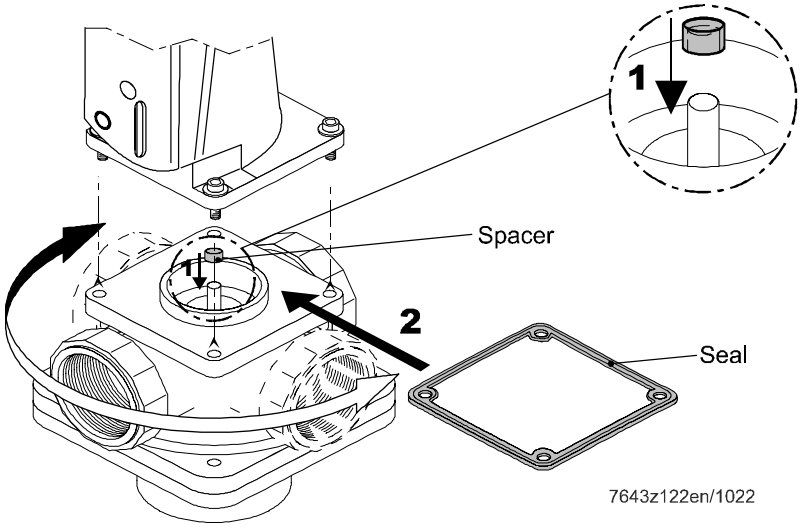

Please note!
The seal and the spacer must be mounted!
The seal must be mounted with its profile side facing the SKPx5. A suitable cable gland (SKPx5.xxxUx / NPSM liquid tight) or a suitable connector with a seal (SKPx5.xxxEx / AGA64 or AGA65) must be used. In conjunction with the VGG, refer to Data Sheet N7636 (flow restriction).

Setpoint fine adjustment to SKP25
Packaging version with one setpoint spring each.

AGA30.x

Article no.	Type	Setpoint spring		
		1.5...12 kPa Color: Yellow 1	10...25 kPa Color: Red 2	10...36 kPa Color: Blank 3
BPZ:AGA30.0	**AGA30.0**	●		
BPZ:AGA30.1	**AGA30.1**		●	
BPZ:AGA30.2	**AGA30.2**			●

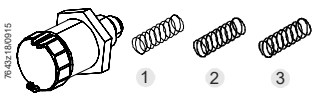

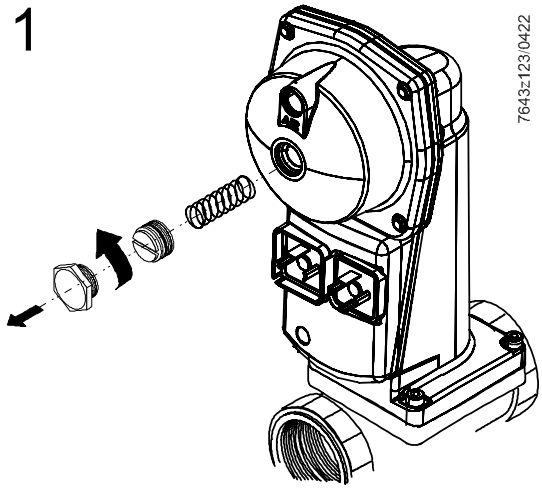

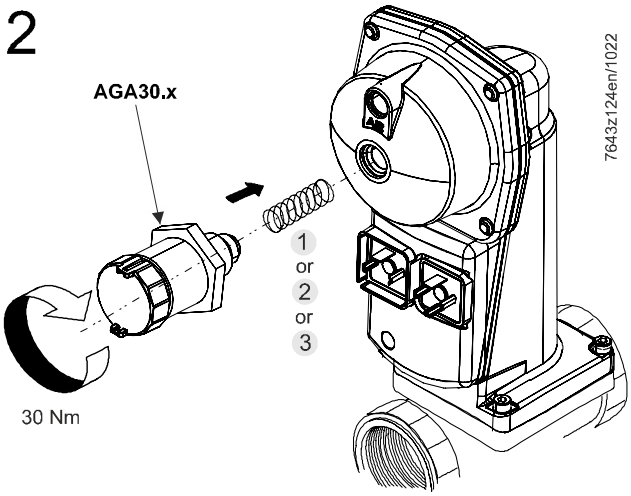

Note!
All typical technical information applies to nominal conditions.

General unit data

Mains voltage - Europe → SKPx5.xxxE2 → SKPx5.xxxE1 - Japan → SKPx5.xxxF1 → SKPx5.xxxF2	 AC 230 V –15%/+10% AC 120 V –15%/+10% AC 100 V –15%/+10% AC 200 V –7%/+10%
Mains frequency - Europe - Japan	 50 / 60 Hz ±6% 60 Hz ±6%
Power consumption European → SKPx5.xxxEx → SKP25.2xxEx Japan → SKPx5.xxxFx	Protection 1 A slow Max. 10 VA Max. 35 VA (in stage 2) Max. 13 VA
Closing time → SKPx5	 <1 s (at shutdown)
Required time interval load change carried via air / fuel ration pressure between high-fire and low-fire → SKP25.3 / SKP55 / SKP75	 Min. 4 s (depending on valve stroke)
Safety class	I
Degree of protection → SKPx5 → SKP25 / SKP55	 **IP54** → only ensured when central screw at the connector is tightened **IP65** → only with gasket kit AGA66 → only with screwed-on locking caps

Note!
Degree of protection IP54 and IP65 only possible with mounted connectors.

Group 1	In accordance with DIN EN 88-1
Pollution degree	2
Rated surge voltage	Overvoltage category III in accordance with DIN EN 60730-1
Mode of operation	Automatic controller and control unit: Type 2C
Design of the controller and control unit	Integrated controller and control unit
Control class → SKP25.4 • Accuracy class • Closing pressure class	A to DIN EN 88-1 In accordance with EN 88-2:AC5 In accordance with EN 88-2:SG10
Control accuracy → SKP75 → SKP55	 <10 % at «Δpmin», <2 % at «Δpmax» <10 % at «Δpmin», <1 % at «Δpmax»

Permissible operating pressure or permissible gas pressure at the connection point	
→ SKP25.0	Max. 120 kPa
→ SKP25.2	Max. 120 kPa
→ SKP25.3	Max. 120 kPa
→ SKP25.4 with VGJ valve	Max. 230 kPa
→ SKP25.6	Max. 120 kPa
→ SKP55	Max. 120 kPa
→ SKP75	Max. 120 kPa
Control variable gas pressure	
→ SKP25.0	0.05...25 kPa (3 setpoint springs)
→ SKP25.2	0.2...6 kPa
→ SKP25.2xxxxL	0.2...2 kPa
→ SKP25.3	0.05...5 kPa
→ SKP25.4	7...200 kPa (3 setpoint springs)
→ SKP25.6	<0 kPa (atmosphere)
→ SKP55	Difference pressure P_{G+} / P_{G-} 0.03...20 kPa
→ SKP75 / SKP75.5	Difference pressure P_G-P_F or P_G-P_{Air} 0.08...12 kPa
Absolute / difference pressure of combustion air (reference variable)	
→ SKP25.3	0.05...7.5 kPa
→ SKP55	Difference pressure P_{L+} / P_{L-} 0.03...20 kPa
→ SKP75 / SKP75.5	P_{Air}-$P_{Combustion\ space}$ >0.05 kPa
Air pressure / difference pressure	
- at «P_{Gas} / P_{Air}» ≥ 2	Max. 3 kPa
- at «P_{Gas} / P_{Air}» ≤ 2	Max. 5 kPa
- For higher pressures, refer to AGA78 in the *Accessories* chapter	Max. 15 kPa
Difference pressure ratio (gas / air) adjustable	
→ SKP25.3 / SKP55	1:1
→ SKP75 / SKP75.5	0.4...9 (Factory supplied 1.3)
Permissible combustion space pressure	
→ SKP75	3 kPa
Parallel translation P_{Gas}	
→ SKP25.3 / SKP55	±0.1 kPa
→ SKP25.6	0 kPa/-0.9 kPa
→ SKP75	±0.1 kPa (Factory supplied 0)
→ SKP75.5	+0.1 kPa/-0.45 kPa (Factory supplied 0)
Position switch (if built-in)	As closed position switch factory-made justified Position valve CLOSED or OPEN
- Switching load	4 A (2 A, cosφ = 0.3) Protection 6 A slow

Notice!
Safety extra-low voltage may not be connected.
If this is not observed, there will be a risk of electric shock!

On-time	100 %
Opening speed, typical (approx. 2 mm/s)	Lower opening speeds due to low ambient temperatures can be compensated by fitting an AGA63.5A27 heating element

Permissible mounting positions

Always with the diaphragms in the vertical position

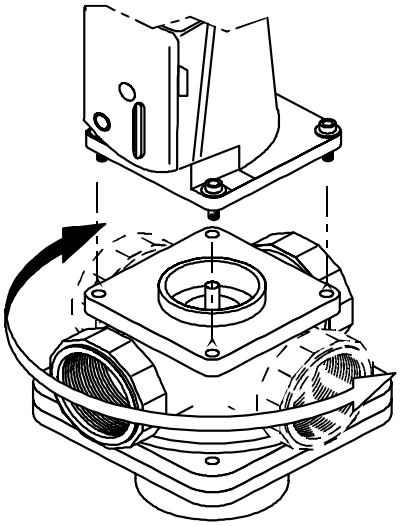

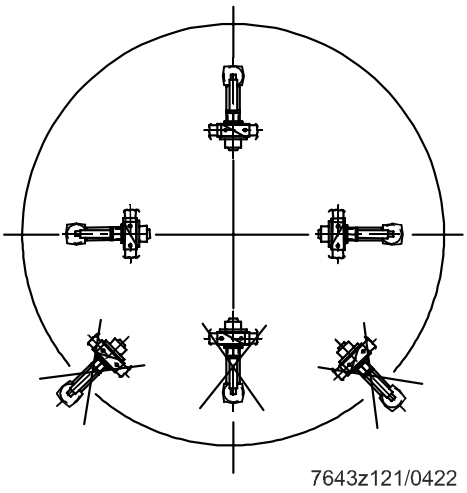

Weight	
→ SKP15	Approx. 1.1 kg
→ SKP25	Approx. 1.6 kg
→ SKP25.0	Approx. 1.6 kg
→ SKP25.2	Approx. 2.1 kg
→ SKP55	Approx. 1.9 kg
→ SKP75	Approx. 2.3 kg
→ AGA64	Approx. 30 g
→ AGA65	Approx. 36 g
→ AGA62.000A000	Approx. 66 g
Permissible media	Depending on used valve
Media inlet pressure «PE»	Depending on used valve
Permissible media temperature	Depending on used valve
Flow rate	Depending on used valve
Permissible test pressure «PG»	100 kPa
Permissible under pressure «PG»	20 kPa
Gas family	I...III

Environmental conditions	**Storage**	DIN EN 60721-3-1
	Climatic conditions	Class 1K3
	Mechanical conditions	Class 1M2
	Temperature range	-15...+60 °C
	Humidity	<95 % r.h.
	Transport	DIN EN 60721-3-2
	Climatic conditions	Class 2K2
	Mechanical conditions	Class 2M2
	Temperature range	-15...+60 °C
	Humidity	<95 % r.h.
	Operation	DIN EN 60721-3-3
	Climatic conditions	Class 3K3
	Mechanical conditions	Class 3M3
	→ SKP25.0 with AGA30.7 and SAS	See *Use*
		No classification «-M-»
		(restricted operating conditions)
	Temperature range	-10...+60 °C
		(longer opening times below 0 °C)
		-20…+60 °C
		(with heating element AGA63.5A27)
	Temperature range	-5…+55 °C
	Mechanical conditions	
	→ SKP25.2	-10...+50 °C
		(restricted operating conditions)
	→ SKP25.0 with AGA30.7 and SAS	-4…+54 °C
		(restricted operating conditions)
	Humidity	<95 % r.F.
	Installation altitude	Max. 2,000 m above sea level

BOONYIUM AND ASSOCIATES LIMITED
1314-1322 Srinakarin Road, On Nut, Suanluang, Bangkok 10250, **THAILAND**
Tel. 02 322 9365-66(Burner Section)
http://www.boonyium.co.th Email: burnerinfo@boonyium.co.th